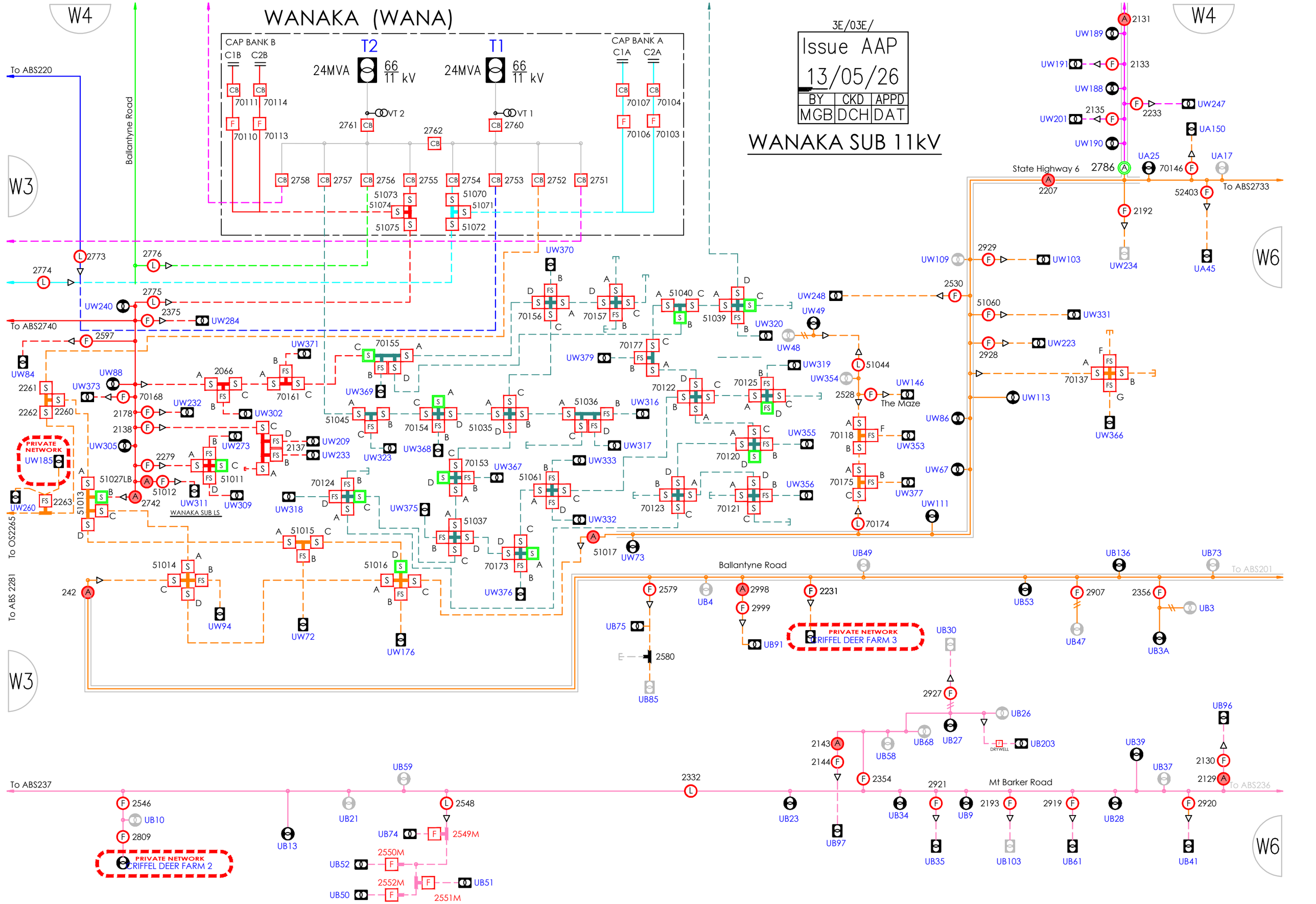
WANAKA (WANA)
3E/03E/
Issue AAP
13/05/26
BY CKD APPD
MGB DCH DAT
WANAKA SUB 11kV
CAP BANK B
C1B C2B
CAP BANK A
C1A C2A
T2
T1
24MVA 66/11 kV
VT 2
VT 1
Ballantyne Road
To ABS220
To ABS2740
To OS2265
To ABS 2281
To ABS2733
To ABS201
To ABS237
To ABS236
State Highway 6
Mt Barker Road
The Maze
PRIVATE NETWORK
CRIFFEL DEER FARM 2
CRIFFEL DEER FARM 3
WANAKA SUB LS
W3
W4
W6